選擇正確合適的泵浦來運轉系統

Select the Right Pump for Your Process

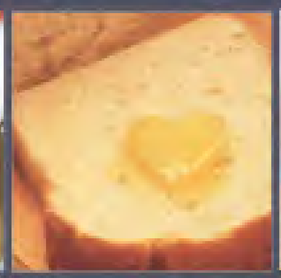

JC泵浦適合一般通用的市場，產品製造過程非常優質，正確的泵浦，下列應用書指引你做更好的選擇與運用。

JC is designed for general purpose applications. The right pump for you depends on your process. The following guidelines will assist us in serving you better.

應用範圍	Applications
· 充填	Bottling
· CIP清洗	Cleaning Applications/CIP
· 脫醇	De-alcoholization
· 蒸餾	Distillation
· 乳化	Emulsifying
· 逆滲透	Reverse Osmosis
· 混合攪拌	In-Line Mixing
· 純水	Water Conditioning
· 輸送	Transfer Filtration
· 萃取	Extraction
· 解析	Dialysis
· 氣體處理	De-gassing
· 碳化	Carbonizing
· 均質	Homogenizing
· 發酵	Fermentation

JVP Pumps

JVP Pumps

離心式食品級衛生泵

SANITARY CENTRIFUGAL PUMP

JC系列

JC SERIES

40-140

40-170

40-170W

離心式食品級衛生泵

SANITARY CENTRIFUGAL PUMP

JC食品級衛生泵為316L不鏽鋼製作，
內外全鏡面拋光，承接座304不鏽鋼，
卓越的可靠性，性能表現保證，
為一安靜、高效率、維護成本低之離心泵

Sanitary JC pump manufacture in 316L, mirror polish all parts internal & external, 304SS lantern piece superior reliability performance guarantee quality which is quiet, high efficiency, low cost centrifugal pump.

最大流量：60 m3/hr	MAX FLOW：60 m3/hr
最大工作壓力：10 BAR	MAX PRESSURE：10 BAR
最高溫度：120°C	MAX TEMPT.：120°C
最高轉速：3500 RPM	MAX SPEED：3500 RPM

選項及配件 OPTIONS AND VERSIONS

・碳化矽/碳化矽 機械軸封	・Mechanical seal in SiC/SiC
・O-ring為VITON 或PTFE	・Gaskets in FPM (Viton) and PTFE
・排水閥	・Drain port
・出入口：DIN, IDF…	・Connections：Clamp, SMS, RJT…
・其他馬達防護等級	・Motor with other protections

衛生級離心泵
SANITARY CENTRIFUGAL PUMP

40-110

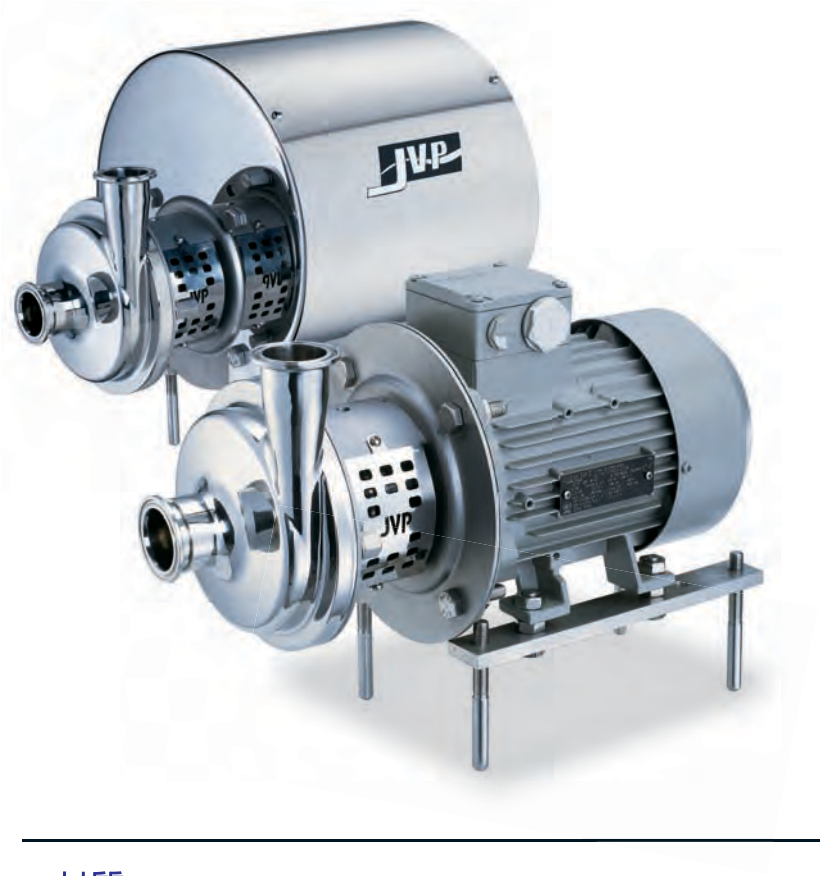

標準設計

外殼：精密脫臘鑄造316 L
標準配備：夾式出入口
軸心為3片特殊軸心設計搭配6個固定螺絲
5葉式開放型葉片可溫和輸送且低噪音
所有型號共用一種軸封
可拆式軸封座，方便維修並且可CIP
304不銹鋼馬達外罩及可調式機腳
IEC標準馬達B35、IP55、F絕緣
工業等級：內外噴砂處理

Standard design

- Casing manufacture in precision investment casting 316L,
- Clamp connection standard
- 3 pcs stub shaft design with 6 fix screws
- 5 blades open impeller to handle product gently and less noisy
- Standard mechanical seal in one size
- Removable stationary seal seat. Easy to replace mechanical seal
- CIP cleanable
- 304 SS shroud with adjustable legs
- IEC B35 standard motor, IP55, F insulation

材質

流體接觸金屬部分：AISI 316L 或 304 SS
其他金屬部分：AISI 304 SS
墊片（標準）：EPDM 橡膠
機械軸封：碳化矽/石墨/EPDM
內外鏡面拋光

Material

Product contact steel parts	AISI 316L or 304 SS
Other steel parts	AISI 304 SS
Gasket (standard)	EPDM rubber
Mechanical seal	SIC/CARBON/EPDM
Internal / External finishing	Mirror polished

選項

碳化矽/碳化矽，單軸封或雙軸封沖洗式
墊片VITON 或 PTFE
排水閥
其他表面處理
防爆馬達
特殊材質：304SS,哈式合金,雙相鋼,鈦…等

Options

Mech. Seal in sic/sic and single or double Flushing
Gaskets VITON or PTFE
Drain connection
Other finishing available
Explosion-proof motor
Special material:304SS, Hastelloy-C, Duplex, Ti...etc.

衛生級離心泵
SANITARY CENTRIFUGAL PUMP

40-110

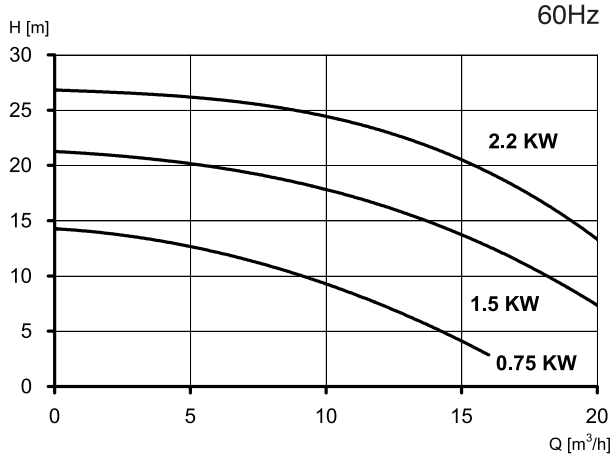

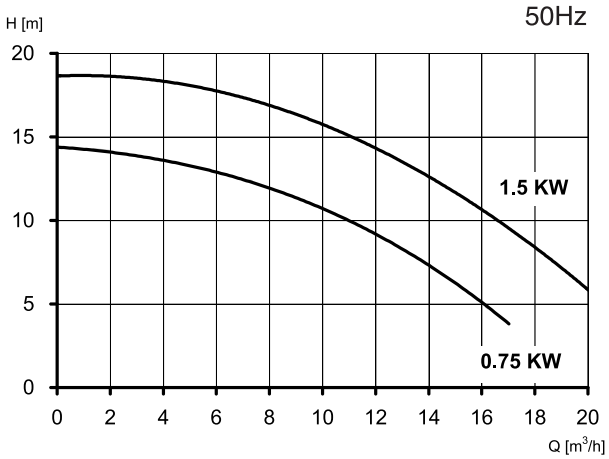

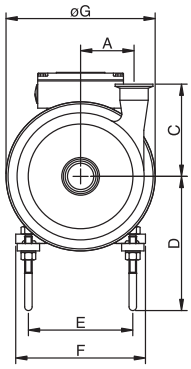

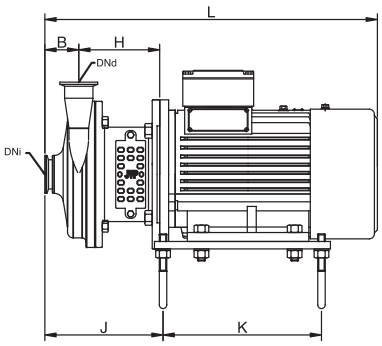

尺寸圖 DINMENSION

MODEL	MOTOR		CLAMP		A	B	C	D		E	F	G	H	J	K	L
	SIZE	KW	DNi	DNd				Min.	Max.							
JC 40-110/0.75	80	0.75	1 1/2"	1 1/2"	42	60	115	140	153	130	160	200	107	178	212	410
JC 40-110/1.5	80	1.5	1 1/2"	1 1/2"	42	60	115	140	153	130	160	200	107	178	212	450
JC 40-110/2.2	80	2.2	1 1/2"	1 1/2"	42	60	115	140	153	130	160	200	107	178	212	457

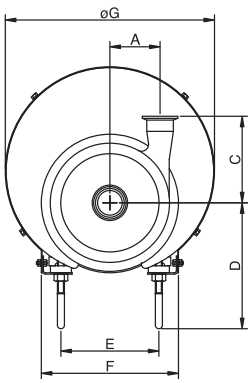

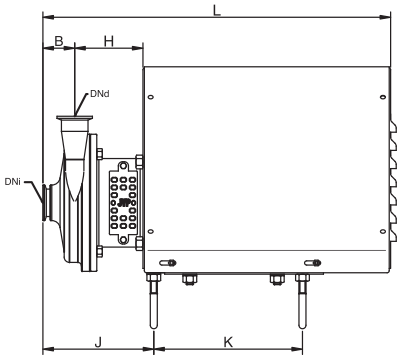

尺寸圖 DINMENSION

MODEL	MOTOR		CLAMP		A	B	C	D		E	F	G	H	J	K	L
	SIZE	KW	DNi	DNd				Min.	Max.							
JC 40-110/0.75	80	0.75	1 1/2"	1 1/2"	42	60	115	140	153	130	160	299	105	178	212	425
JC 40-110/1.5	80	1.5	1 1/2"	1 1/2"	42	60	115	140	153	130	160	299	105	178	212	497
JC 40-110/2.2	80	2.2	1 1/2"	1 1/2"	42	60	115	140	153	130	160	299	105	178	212	497

衛生級離心泵
SANITARY CENTRIFUGAL PUMP

40-140

標準設計

外殼：精密脫臘鑄造316 L或 304 SS
標準配備：夾式出入口
軸心為3片特殊軸心設計搭配6個固定螺絲
6葉式開放葉片可溫和輸送且低噪音
所有型號共用一種軸封
可拆式軸封座，方便維修並且可CIP
304不銹鋼馬達外罩及可調式機腳
IEC標準馬達B35、IP55、F絕緣
工業等級：內外噴砂處理

Standard design

- Casing manufacture in precision investment casting 316L,
- Clamp connection standard
- 3 pcs stub shaft design with 6 fix screws
- 6 blades open impeller to handle product gently and less noisy
- Standard mechanical seal in one size
- Removable stationary seal seat. Easy to replace mechanical seal
- CIP cleanable
- 304ss shroud with adjustable legs
- IEC B35 standard motor, IP55, F insulation

材質

流體接觸金屬部分：AISI 316L 或 304 SS
其他金屬部分：AISI 304 SS
墊片（標準）：EPDM 橡膠
機械軸封：碳化矽/石墨/EPDM
內外鏡面拋光

Material

Product contact steel parts	AISI 316L or 304 SS
Other steel parts	AISI 304 SS
Gasket (standard)	EPDM rubber
Mechanical seal	SIC/CARBON/EPDM
Internal / External finishing	Mirror polished

選項

碳化矽/碳化矽，單軸封或雙軸封沖洗式
墊片VITON 或 PTFE
排水閥
其他表面處理
防爆馬達
特殊材質：304SS,哈式合金,雙相鋼,鈦…等

Options

Mech. Seal in sic/sic and single or double Flushing
Gaskets VITON or PTFE
Drain connection
Other finishing available
Explosion-proof motor
Special material:304SS, Hastelloy-C, Duplex, Ti...etc.

www.jvpump.com

JVP Pumps

衛生級離心泵
SANITARY CENTRIFUGAL PUMP

40-140

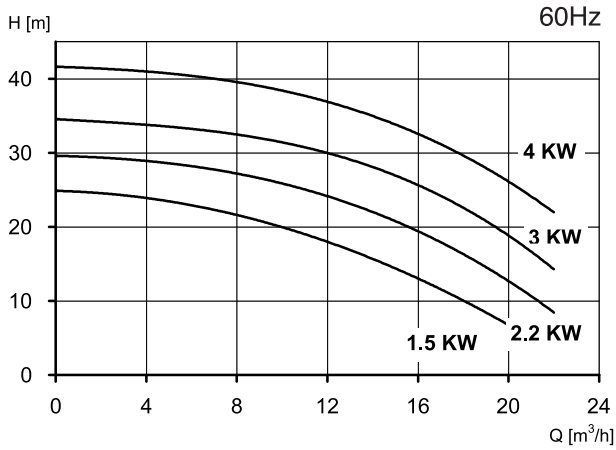

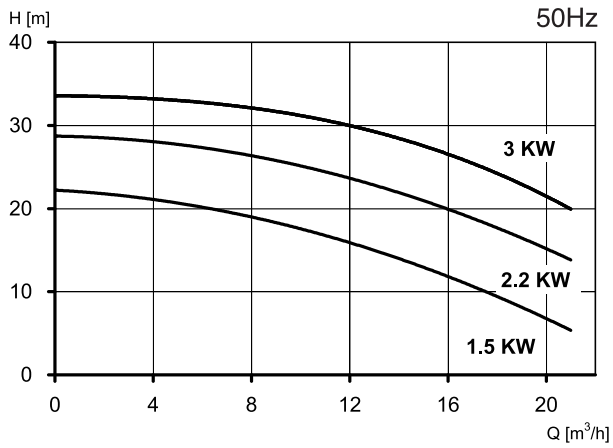

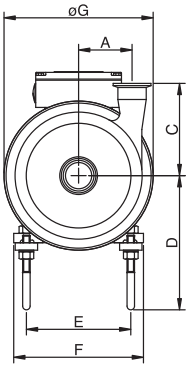

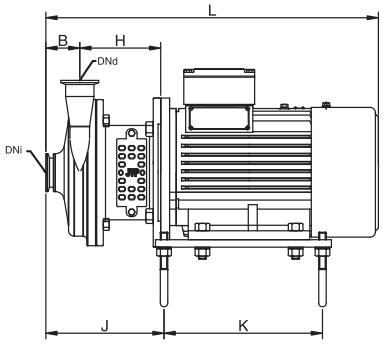

尺寸圖 DINMENSION

MODEL	MOTOR		CLAMP		A	B	C	D		E	F	G	H	J	K	L
	SIZE	KW	DNi	DNd				Min.	Max.							
JC 40-140/1.5	90	1.5	1 1/2"	1 1/2"	72	45	115	155	168	140	174	200	109	158	212	446
JC 40-140/2.2	90	2.2	1 1/2"	1 1/2"	72	45	115	155	168	140	174	200	109	158	212	446
JC 40-140/3.0	90	3.0	1 1/2"	1 1/2"	72	45	115	155	168	140	174	200	109	158	212	446
JC 40-140/4.0	112	4.0	1 1/2"	1 1/2"	72	45	115	177	190	140	174	200	109	158	212	446

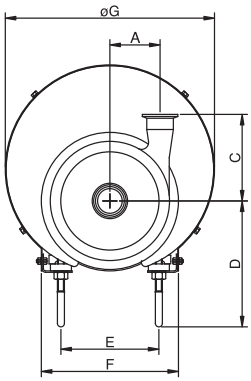

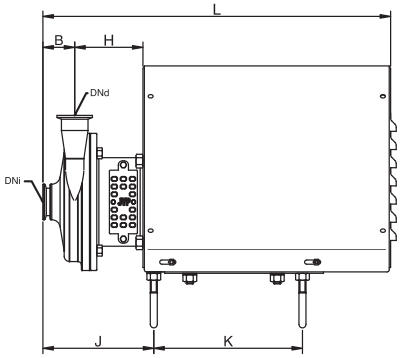

尺寸圖 DINMENSION

MODEL	MOTOR		CLAMP		A	B	C	D		E	F	G	H	J	K	L
	SIZE	KW	DNi	DNd				Min.	Max.							
JC 40-140/1.5	90	1.5	1 1/2"	1 1/2"	72	45	115	155	168	140	196	299	98	158	212	497
JC 40-140/2.2	90	2.2	1 1/2"	1 1/2"	72	45	115	155	168	140	196	299	98	158	212	497
JC 40-140/3.0	90	3.0	1 1/2"	1 1/2"	72	45	115	155	168	140	196	299	98	158	212	497
JC 40-140/4.0	112	4.0	1 1/2"	1 1/2"	72	45	115	177	190	140	196	299	98	158	212	497

SANITARY CENTRIFUGAL PUMP

JC40-170N

標準設計

外殼：精密脫臘鑄造316 L
標準配備：夾式出入口
軸心為2或3片特殊軸心設計搭配6個固定螺絲
6葉式開放葉片可溫和輸送且低噪音
所有型號共用一種軸封
可拆式軸封座，方便維修並且可CIP
304不鏽鋼馬達外罩及可調式機腳
IEC標準馬達B35、IP55、F絕緣

Standard design

- Casing manufacture in precision investment casting 316L,
- Clamp connection standard
- 2 or 3 pcs stub shaft design with 6 fix screws
- 6 blades open impeller to handle product gently and less noisy
- Standard mechanical seal in one size
- Removable stationary seal seat. Easy to replace mechanical seal
- CIP cleanable
- 304ss shroud with adjustable legs
- IEC B35 standard motor, IP55, F insulation

材質

流體接觸金屬部分：AISI 316 L
其他金屬部分：AISI 304 SS
墊片（標準）：EPDM 橡膠
機械軸封：碳化矽/石墨/EPDM
內外鏡面拋光

Material

Product contact steel parts	AISI 316L
Other steel parts	AISI 304 SS
Gasket (standard)	EPDM rubber
Mechanical seal	SIC/CARBON/EPDM
Internal / External finishing	Mirror polished

選項

碳化矽/碳化矽單軸封沖洗
墊片VITON 或 PTFE
排水閥
其他表面處理
防爆馬達

Options

Mech. Seal in sic/sic and quench
Gaskets VITON or PTFE
Drain connection
Other finishing available
Explosion-proof motor

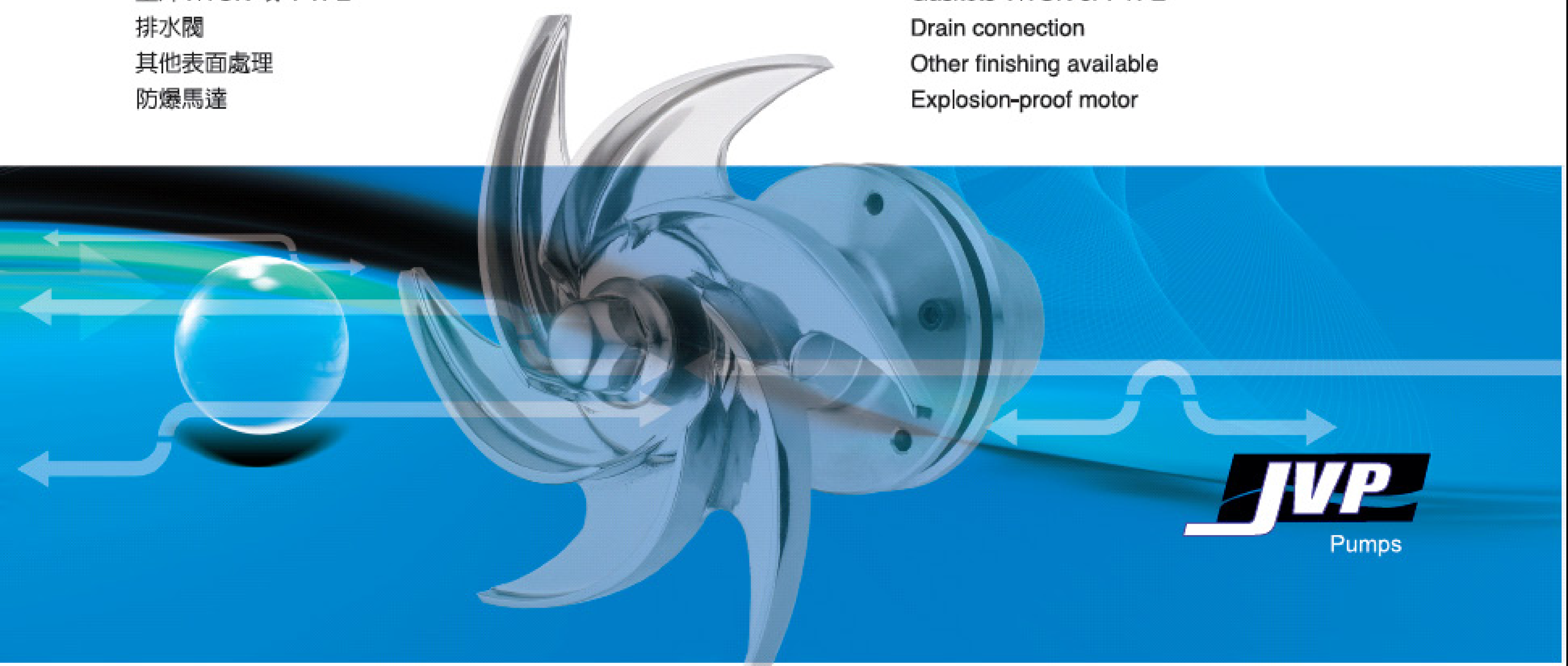

SANITARY CENTRIFUGAL PUMP

JC40-170N

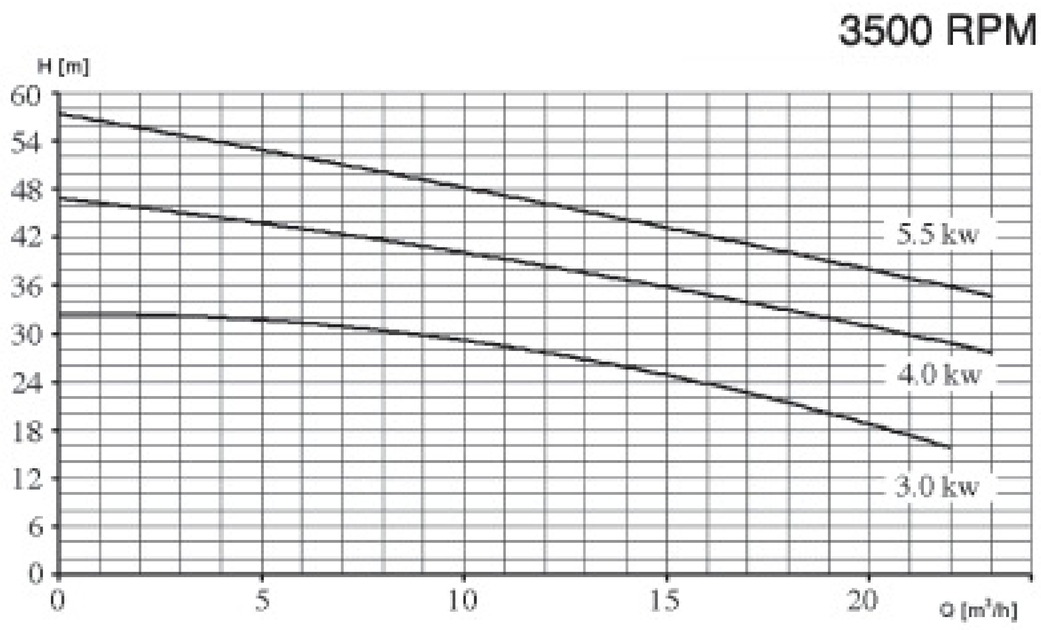

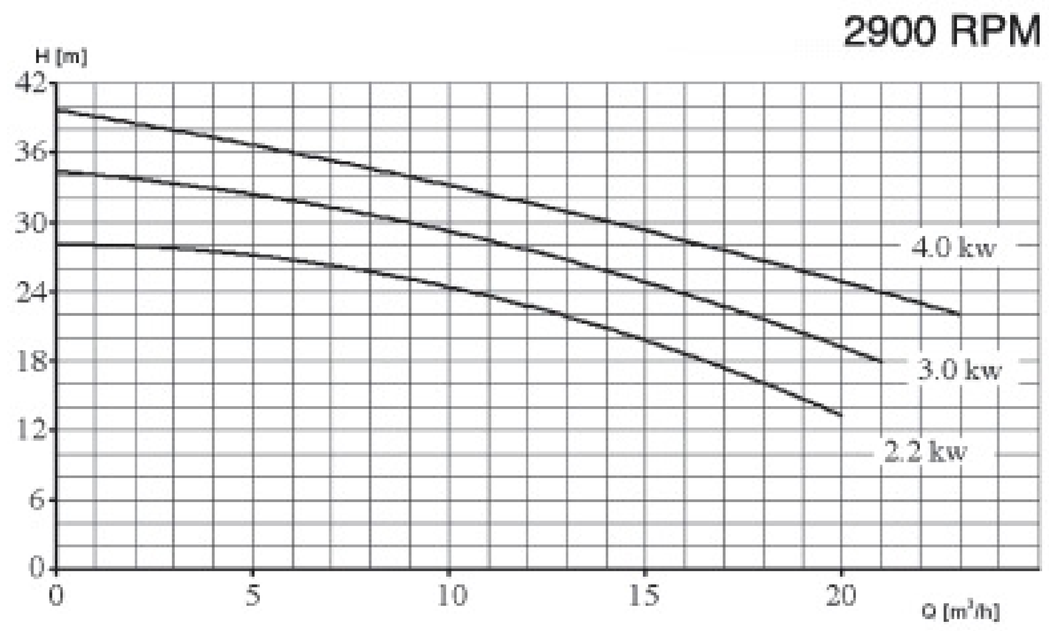

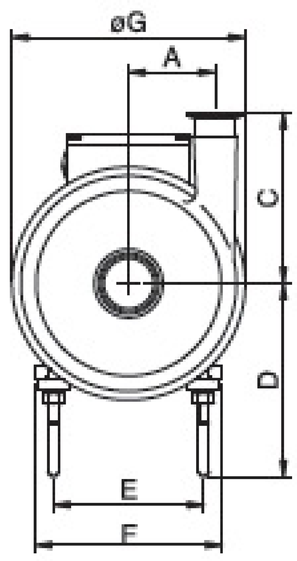

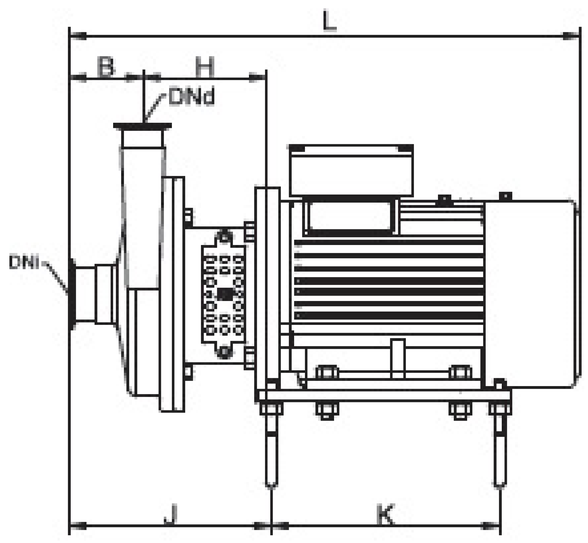

尺寸圖 DINMENSION

MODEL	MOTOR		CLAMP		A	B	C	D		E	F	G	H	J	K	L
	SIZE	KW	DNi	DNd				Min.	Max.							
JC 40-170/2.2	90	2.2	2"	1½"	80	68	130	165	200	140	174	217	115	188	212	475
JC 40-170/3.0	90	3	2"	1½"	80	68	130	165	200	140	174	217	115	188	212	475
JC 40-170/4.0	112	4	2"	1½"	80	68	130	193	210	190	230	250	145	182	276	550
JC 40-170/5.5	112	5.5	2"	1½"	80	68	130	193	210	190	230	250	145	182	276	550
JC 40-170/5.5	132	5.5	2"	1½"	80	68	130	193	210	216	256	300	170	208	333	669

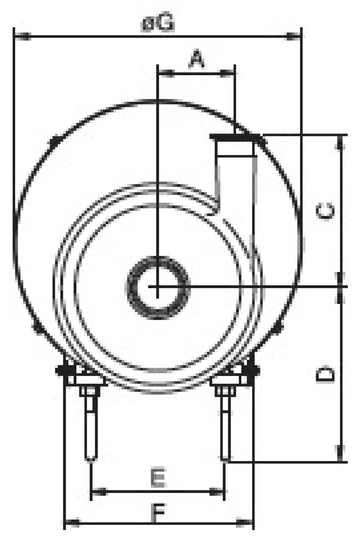

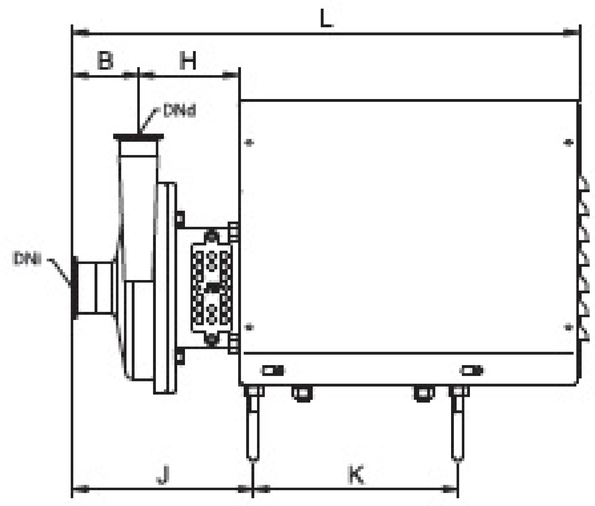

尺寸圖 DINMENSION

MODEL	MOTOR		CLAMP		A	B	C	D		E	F	G	H	J	K	L
	SIZE	KW	DNi	DNd				Min.	Max.							
JC 40-170/2.2	90	2.2	2"	1½"	80	68	130	165	200	140	196	299	104	188	212	526
JC 40-170/3.0	90	3	2"	1½"	80	68	130	165	200	140	196	299	104	188	212	526
JC 40-170/4.0	112	4	2"	1½"	80	68	130	193	210	190	256	349	133	182	276	607
JC 40-170/5.5	112	5.5	2"	1½"	80	68	130	193	210	190	256	349	133	182	276	607
JC 40-170/5.5	132	5.5	2"	1½"	80	68	130	193	210	216	282	430	158	208	333	739

衛生級離心泵
SANITARY CENTRIFUGAL PUMP

40-170W

標準設計

外殼：精密脫臘鑄造316 L 或304 SS
標準配備：夾式出入口
軸心為2或3片特殊軸心設計搭配6個固定螺絲
6葉式開放葉片可溫和輸送且低噪音
所有型號共用一種軸封
可拆式軸封座，方便維修並且可CIP
304不銹鋼馬達外罩及可調式機腳
IEC標準馬達B35、IP55、F絕緣
工業等級：內外噴砂處理

Standard design

- Casing manufacture in precision investment casting 316L,
- Clamp connection standard
- 2 or 3 pcs stub shaft design with 6 fix screws
- 6 blades open impeller to handle product gently and less noisy
- Standard mechanical seal in one size
- Removable stationary seal seat. Easy to replace mechanical seal
- CIP cleanable
- 304ss shroud with adjustable legs
- IEC B35 standard motor, IP55, F insulation

材質

流體接觸金屬部分：AISI 316L 或 304 SS
其他金屬部分：AISI 304 SS
墊片（標準）：EPDM 橡膠
機械軸封：碳化矽/石墨/EPDM
內外鏡面拋光

Material

Product contact steel parts	AISI 316L or 304 SS
Other steel parts	AISI 304 SS
Gasket (standard)	EPDM rubber
Mechanical seal	SIC/CARBON/EPDM
Internal / External finishing	Mirror polished

選項

碳化矽/碳化矽，單軸封或雙軸封沖洗式
墊片VITON 或 PTFE
排水閥
其他表面處理
防爆馬達
特殊材質：304SS，哈式合金，雙相鋼，鈦…等

Options

Mech. Seal in sic/sic and single or double Flushing
Gaskets VITON or PTFE
Drain connection
Other finishing available
Explosion-proof motor
Special material:304SS, Hastelloy-C, Duplex, Ti...etc.

www.jvpump.com

JVP Pumps

衛生級離心泵
SANITARY CENTRIFUGAL PUMP

40-170W

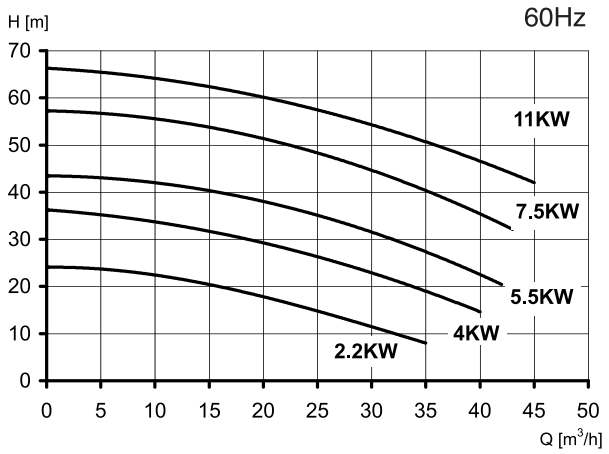

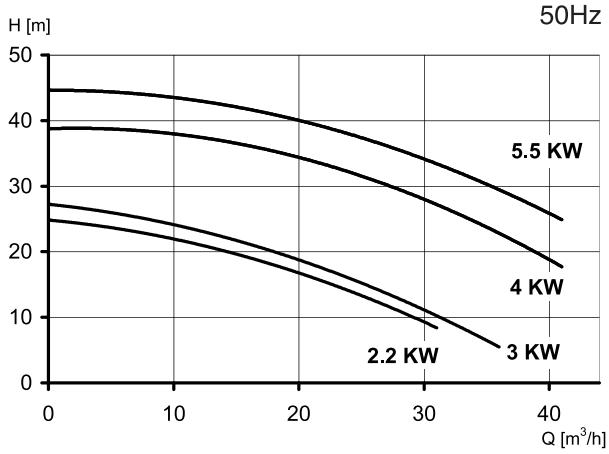

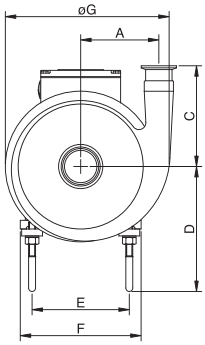

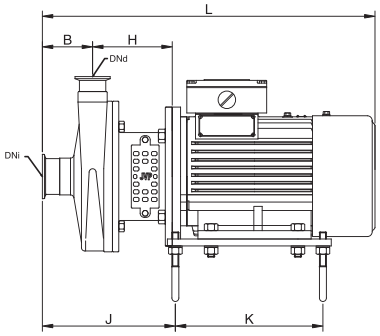

尺寸圖 DINMENSION

MODEL	MOTOR		CLAMP		A	B	C	D		E	F	G	H	J	K	L
	SIZE	KW	DNi	DNd				Min.	Max.							
JC 40-170W/2.2	90	2.2	2"	1 1/2"	112	72	150	165	200	140	174	236	115	191	212	479
JC 40-170W/3.0	90	3	2"	1 1/2"	112	72	150	165	200	140	174	236	115	191	212	479
JC 40-170W/4.0	112	4	2"	1 1/2"	112	72	150	193	210	190	230	250	145	186	276	553
JC 40-170W/5.5	112	5.5	2"	1 1/2"	112	72	150	193	210	190	230	250	145	186	276	553
JC 40-170W/5.5	132	5.5	2"	1 1/2"	112	72	150	193	210	216	256	300	170	211	333	672
JC 40-170W/7.5	132	7.5	2"	1 1/2"	112	72	150	193	210	216	256	300	170	211	333	672
JC 40-170W/11	132	11	2"	1 1/2"	112	72	150	193	210	216	256	300	170	211	333	692

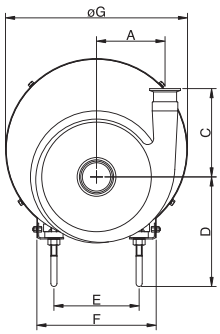

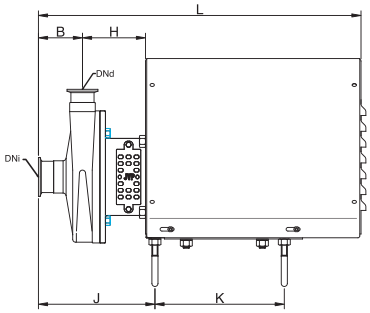

尺寸圖 DINMENSION

MODEL	MOTOR		CLAMP		A	B	C	D		E	F	G	H	J	K	L
	SIZE	KW	DNi	DNd				Min.	Max.							
JC 40-170W/2.2	90	2.2	2"	1 1/2"	112	72	150	165	200	140	196	299	103	191	212	530
JC 40-170W/3.0	90	3	2"	1 1/2"	112	72	150	165	200	140	196	299	103	191	212	530
JC 40-170W/4.0	112	4	2"	1 1/2"	112	72	150	193	210	190	256	349	133	186	276	611
JC 40-170W/5.5	112	5.5	2"	1 1/2"	112	72	150	193	210	190	256	349	133	186	276	611
JC 40-170W/5.5	132	5.5	2"	1 1/2"	112	72	150	193	210	216	282	430	158	211	333	742
JC 40-170W/7.5	132	7.5	2"	1 1/2"	112	72	150	193	210	216	282	430	158	211	333	742
JC 40-170W/11	132	11	2"	1 1/2"	112	72	150	193	210	216	282	430	158	211	333	762